Weather station project in Altium desinger

Daniel Apell

2026-03-13

1.1 Introduction

In many applications there is a need for climate monitoring systems such as smart monitoring networks. These systems allow for continuous measurement using sensors while transmitting the date using Wi-Fi. Possible implementations of the system include remote environmental monitoring, station control systems, or data for agriculture implementations.

1.2 Aim and objective

The aim of this project was to design a solar power wireless weather station using Altium designer. The system consists of Wi-Fi transvers, display, power supply, and sensors. The objective of the project was to design the schematic and PCB layout of the system while following production specifications and engineering practices for RF-signals. Particular attention was given to schematic labels, components placement, trace routing and power distribution decupling and RF transmission impedance design. See project work schematic overview in figure 1.

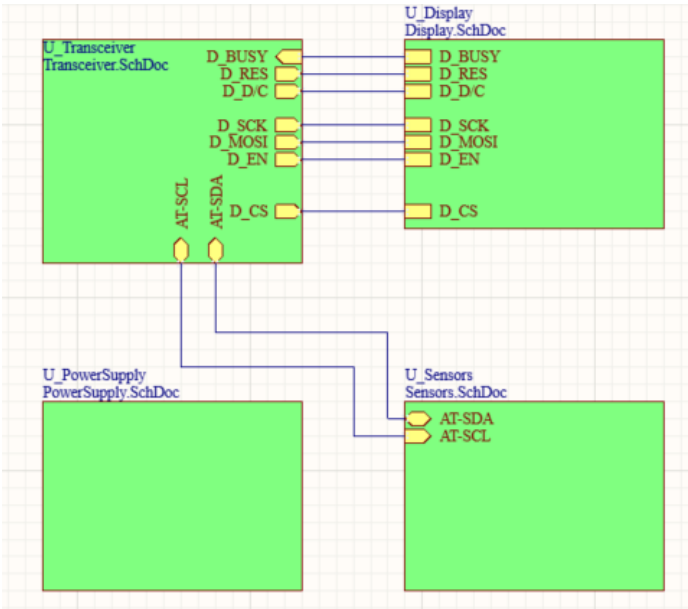

Figure 1: Projekt work schematic overview

2. System Overview

The designed weather system consists of several functional subsystems, see design layout figure 2 and figure 1.

- Microcontroller and Wi-Fi communication module
- Environmental sensor module
- Power supply and energy harvesting system
- External memory
- E-ink display for local data presentation

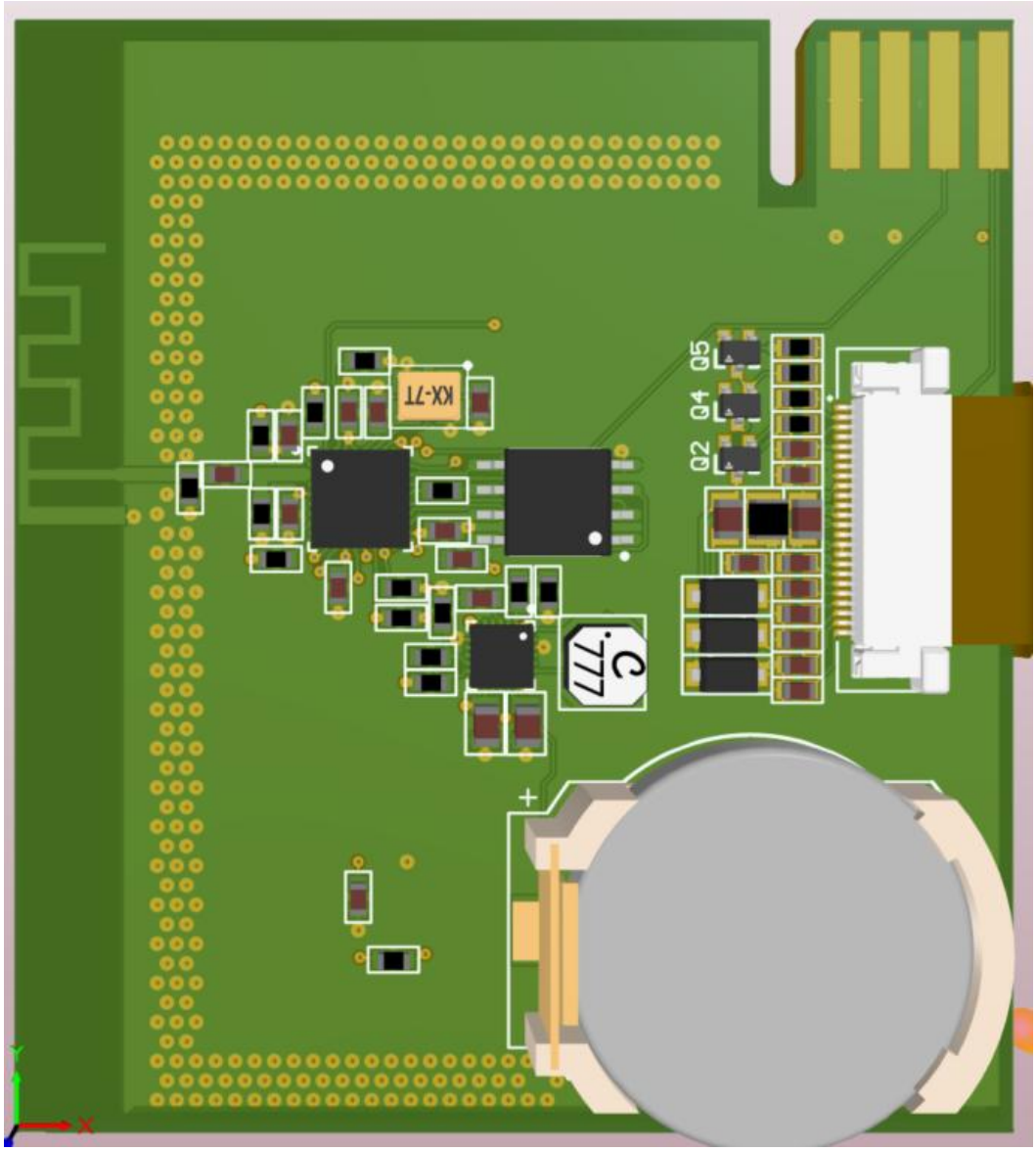

Figure 2: PCB weather station overview design

3. Schematic design layout

This section will present the schematic design and engineering background and theory for the weather station system. A comprehensive overview of the components and the respective schematics will be presented. The schematic was designed with the intention of correctness and readability of the labels. The Functional blocks were separated into subsystem to improve readability and simplify debugging.

3.1 Transceiver

The brain of the system is the microprocessor. The ESP8266 operates at 3.3 V, which is provided through the VDD pins connected. Several decoupling capacitors (100 nF) are placed close to the power pins in order to filter high-frequency noise and stabilize the supply voltage. The RF output is connected to the PCB antenna through impedance matching of 50Ω with the labels of Ant and Antenna. The system also consist of a qyartz oscillator that provide a stable clock signal for the processor, two small capsitors providing voltage stability connected into the Labels of QUARTZ out respectively QUARTZ in. The ESP32 is also connected to the external flasch memory “AT25SF041” used for memory storage for data. Figure 3 illustrating the overview traniscer schematic.

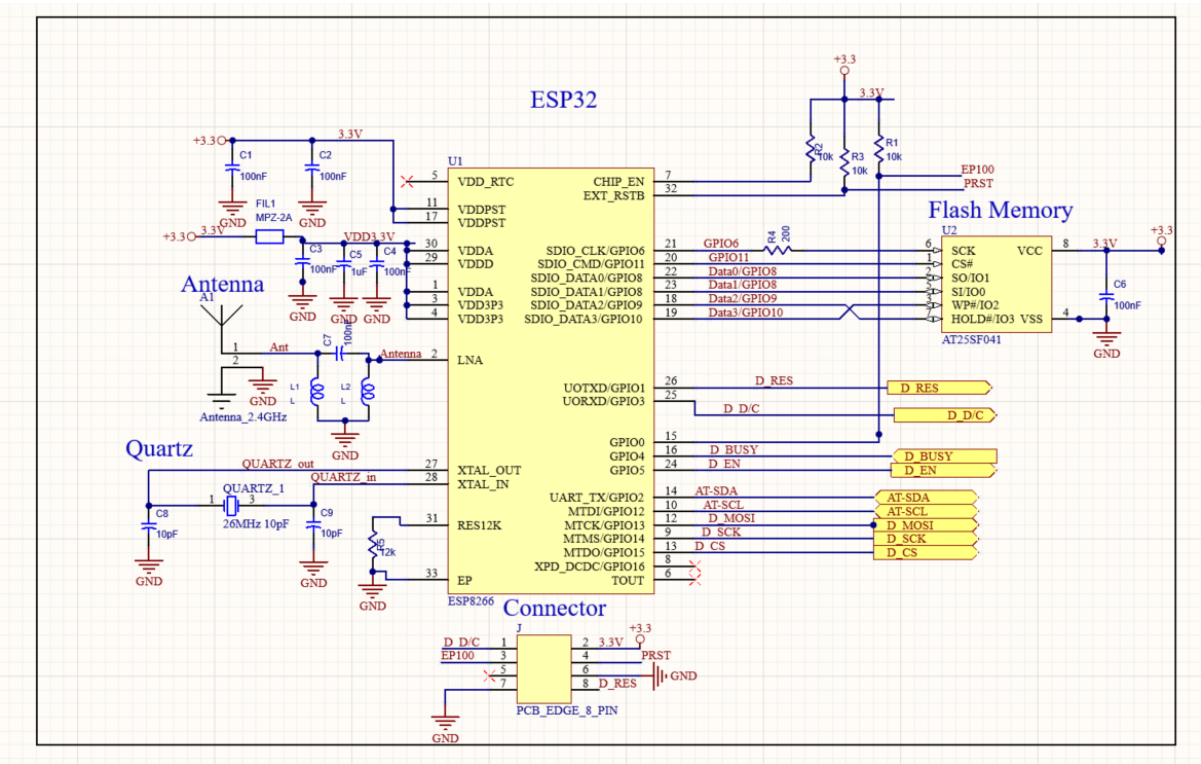

Figure 3: Transceiver schematic overview

3.2 Sensor

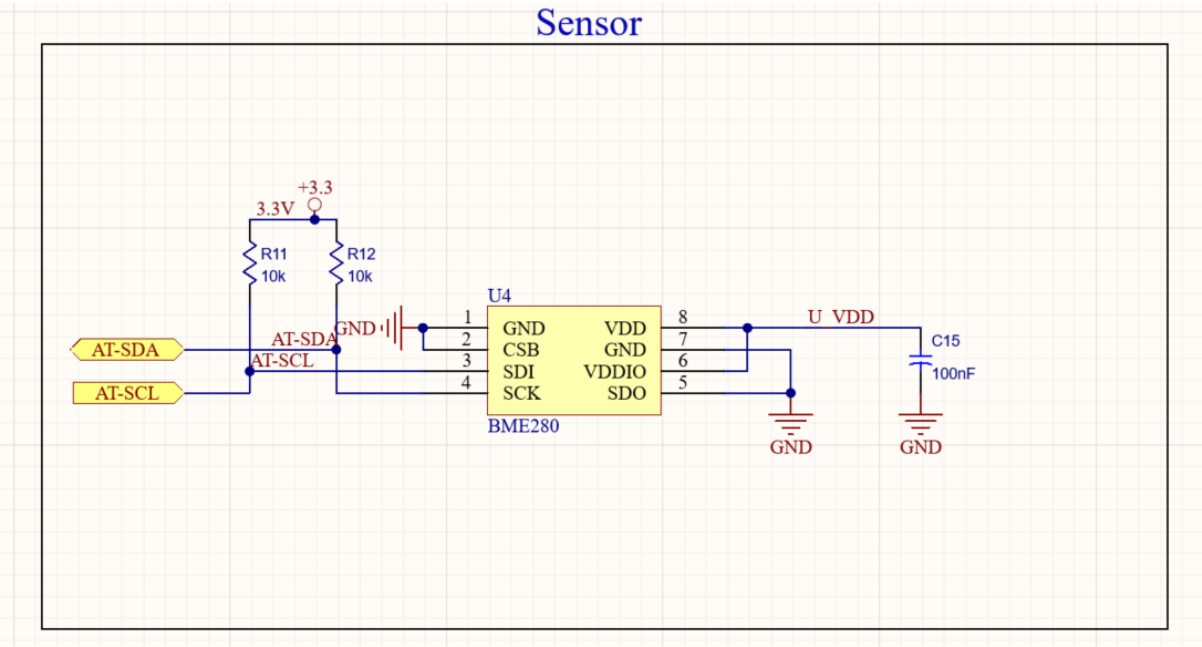

Figure 4: Sensor schematic overview

The sensor BME280 measures the temperature, humidity, and pressure of the surrounding area. The sensor is connected the transiter with the ports of AT-SDA(Data) and AT-SCL(Clock). The sensor is running on 3.3 voltage. See the sensor in figure 4.

3.3 Power system

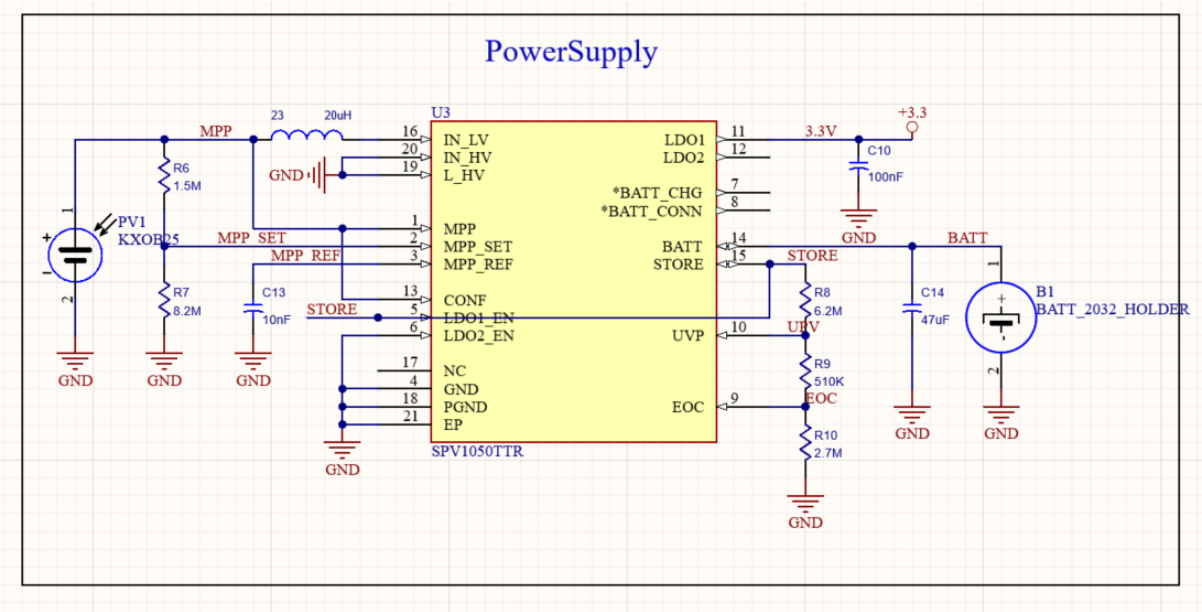

Figure 5: Power supply schematic overview

The power system consists of a SPV1050 circuit, collecting the solar energy and converting it to suitable power for the battery. The solar cell have a nonlinear power flow therefore regulated using the maximum power point (MPP) of the solar cell is configured using the resistor network connected to the MPP, MPP_SET and MPP_REF pins. See a schematic overview in figure 5.

3.4 Display

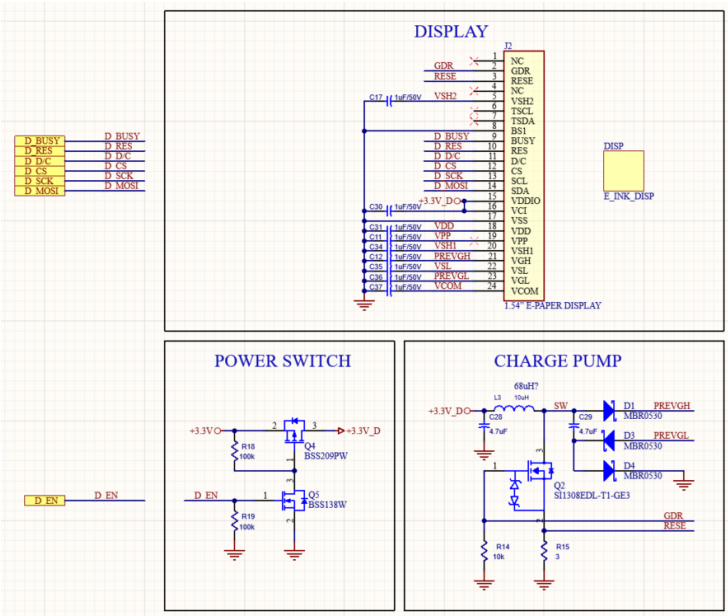

Figure 6: Display system

The display used for presenting the data measured form the system. The display communicates with the microcontroller through an SPI interface, consisting of the signals D_MOSI, D_SCK,D_D/C, D_RES and D_BUS. The display system consists of a MOSFET-based power switch allows the display to be enabled only when required, reducing power consumption. The charge pump circuit generates the higher voltages required by the display driver. The schematic overview can be seen in figure 6.

4. Simulation Results

4.1 Solar cell simulation and theory

The purpose of the solar cell simulation is to simulate analyze how electrical power is generated and delivered to a load. The solar cell is modeled using a current source and diodes that represent the nonlinear electrical behavior.

$$Operating\ points\colon V(NetD1) \ = \ 2.175\ V$$

Open-circuit condition
When the load is disconnete the current will circulate through the diodes and the open circuit voltage will be 2.2 V.

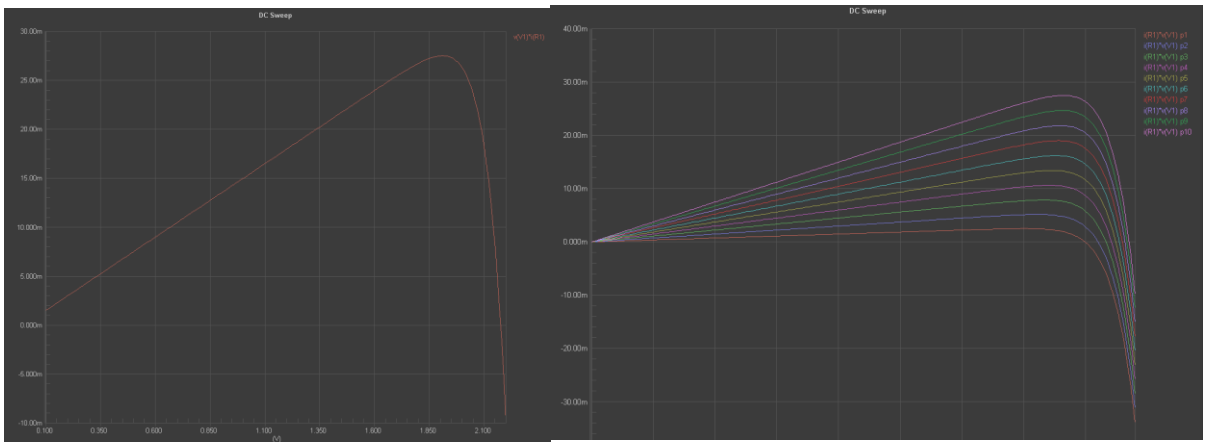

Figur 7: DC sweep with (100mV < V1 < 2.1V) in 10 mV and simulation sweep (0 < I1 < 15mA) with a 1.5 mA step.

The simulation illustrates the maximum power point (MPP) see figure 7. This means the optimal operating voltage is approximately 70–80% of the open-circuit voltage. This means that the solar cell should be operating when in the MPP to extract maximum power. We see different current steps on the right side figure 7 illustrating the behavior of the power output.

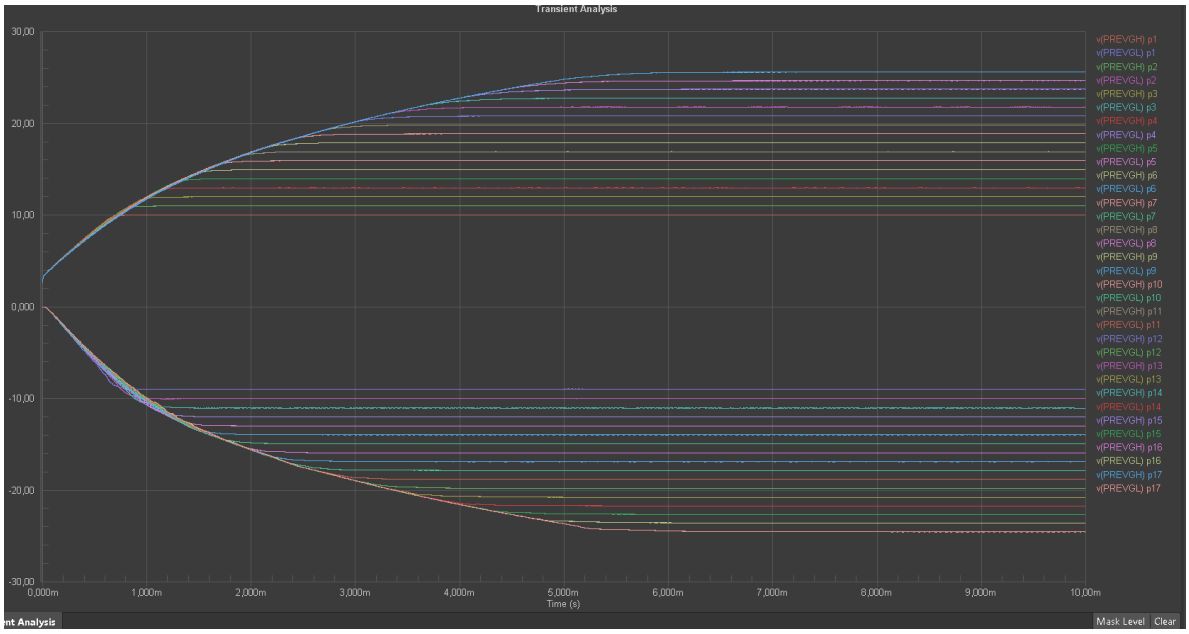

Figure 8: Simulation R107 from 90k to 250k with 10k

The transient simulation was preformed to observe key signals when changing the resistive value from 90k to 250k. See figure 8 demonstrating the result. When looking at the inductance L3 we see that the current ripple is proportional to the induction. This makes a higher induction improve the smoothness. When considering the capacitance C110 and C102 the capacitance is related to the voltage ripple and improving the voltage stability. Reducing the capacitance may increase the voltage ripple and filter efficiency. If the snubber was removed the voltage spike will increase in the SW node. When considering the gateresistor to be reduced the switching speed and voltage spikes will be reduced.

4.2.1 Explaning the PWM

The PWM is used to regulate the output voltage of the charge pump by controlling the duty cycle and the MOSFET switching single. The duty cycle is then controlling the energy transfer to the output voltage. If the output voltage is too low, the duty cycle increases. If the voltage becomes too high, the duty cycle decreases. This feedback control stabilizes the output voltage.

5. Discussion and design results of the layout

Figure 9 illustrates the final PCB layout of the weather station including front and back side of the bord. The design process focused on maintaining signal integrity, stable power distribution and proper RF performance.

5.2 General PCB design concept

The PCB layout was designed in smaller functional blocks to simplify component placement. The components in each subsystem were placed first individually then connections were made between the systems to minimize trace length and improve performance. See figure 9 demonstrating the PCB design.

The RF section, including the antenna, was placed near the edge of the PCB to allow for reduced interference from the circuits. Grounding and impedance matching were implemented with 50 Ω impedance to ensure proper signal transmission. Overall the traces were kept short and tight corners were minimized to ensure reduce electromagnetic interference.

The display, solar panel and sensor were placed on the opposite side of the board to separate for practical reasons.

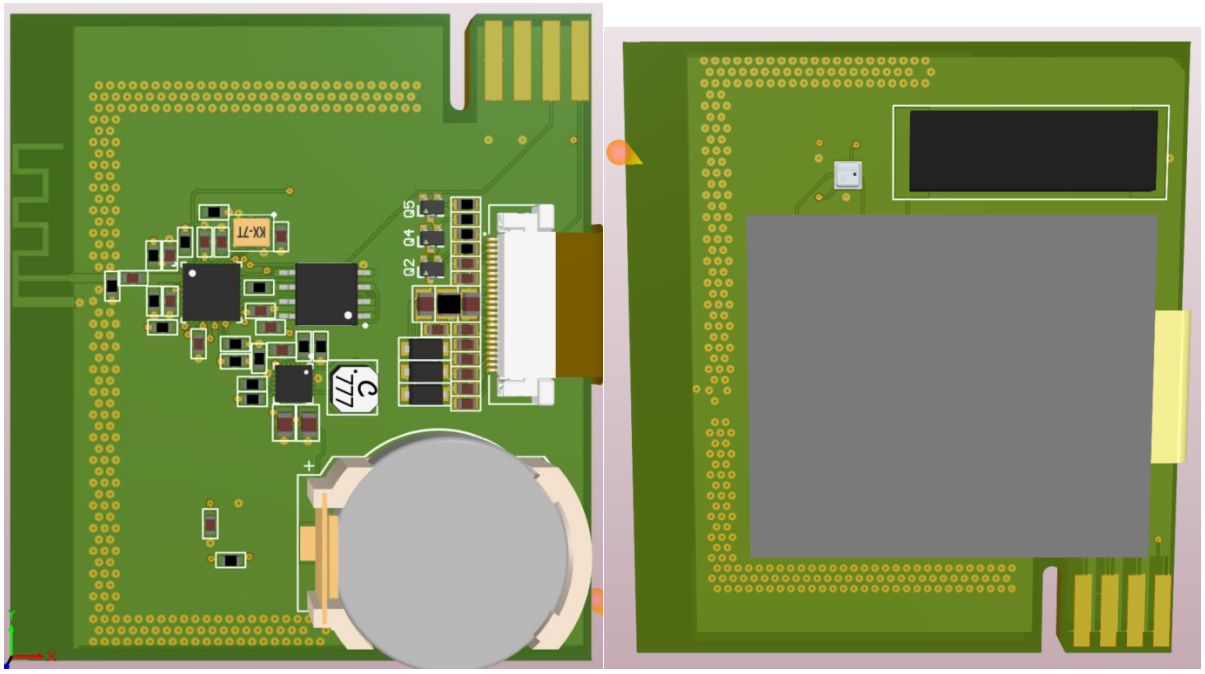

Figure 9: PCB design font side and back side.

5.2 Trace distribution

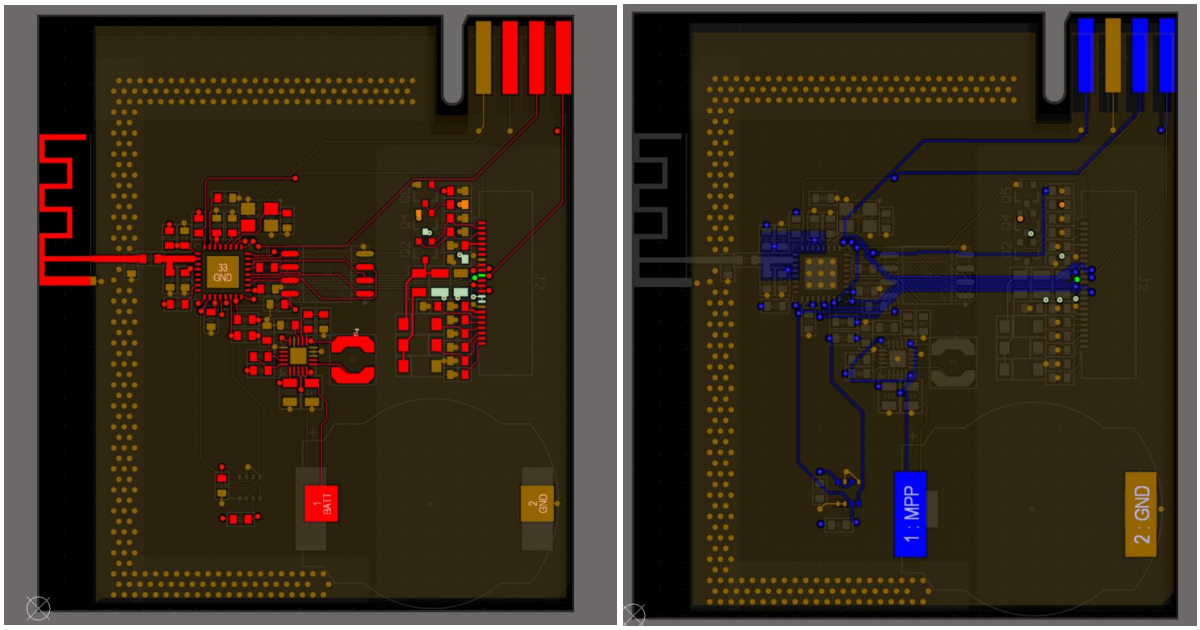

Figure 10: Trace distribution top layer and bottom layer

The signal distribution for the traces were routed to minimize the path length to reduced noise coupling. Trace routing primarily on the top layer, while the bottom layer was used for additional routing and for providing return paths for signals. Differential routing techniques were also applied to improve signal integrity.

5.3 Power decoupling

Capacitors were placed close to the power pins ensuring voltage stability and noise reduction. Each decoupling capacitor 100nF is connected to the power pins providing the microcontroller with local energy. See figure 10.

5.4 Power and ground distribution

Power and ground distribution were implemented using copper polygons on the PCB layers. Top layer consist of a ground plane and via stitching for reduce electromagnetic interference. The antenna do not have a ground plane directly under, but the signal traces are surrounded by ground to reduce noise and improve signal integrity.

Layer two consists of a ground plan and layer three is a power polygon both planes are used for powering and grounding components using vias. Botten layer consists of ground polygon and a voltage polygon named VDD3.3V providing connection to the transceiver. The polygons have distance from the corners and edges on the board for practical reasons in manufacturing to ensure no short circuit. See figure 10.

8. Design Challenges and Self Critical

During the layout process several iterations were performed in order to optimize component placement and trace routing the shortest path. During the layout process several errors were resolved, and the circuit design was revised twice. The second iteration showed significant improvements compared to the initial design.

The distance between vias and components and the traces were considered and the design rules for the RF-signals were carefully considered. Improvements in the size of the bord could have been smaller. During routing efforts were made to keep traces as straight and short as possible in order to reduce signal reflections and interference but further small placement adjustment could be improved. Improvements in the size of the bord could also have been improved to cut costs in manufacturing.

9. Conclusion

The project was both interesting and rewarding and the weather station worked as intended. The PCB project gave valuable experience in engineering thinking related to PCB design, including schematic design, simulation, and PCB layout development. The final system operates as intended and were successfully implemented. The project gave valuable insight into how the weather station is design and the PCB layout techniques.

Efforts were made to keep traces as short and straight as possible.. In addition, the ground plane area was increased to reduce noise and improve signal stability